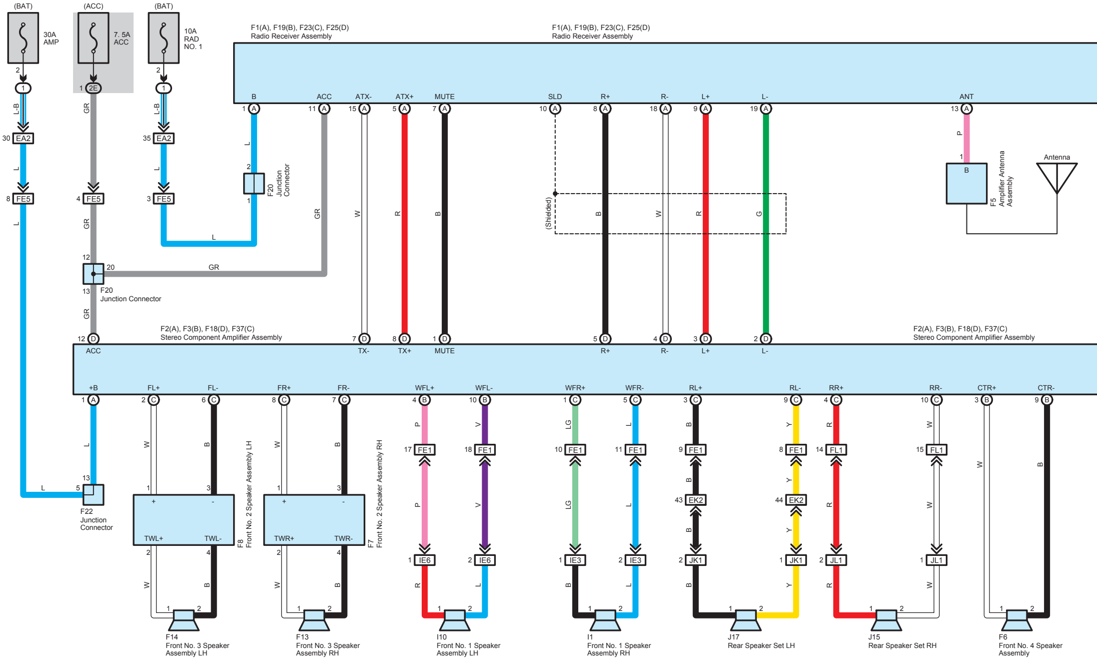
(BAT)
30A
AMP
(ACC)
7. 5A
ACC
(BAT)
10A
RAD
NO. 1
F1(A), F19(B), F23(C), F25(D)
Radio Receiver Assembly
F1(A), F19(B), F23(C), F25(D)
Radio Receiver Assembly
B
ACC
ATX-
ATX+
MUTE
SLD
R+
R-
L+
L-
ANT
1 A
11 A
15 A
5 A
7 A
10 A
8 A
18 A
9 A
19 A
13 A
2
1
1 2E
2
1
L-B
GR
L-B
30 EA2
35 EA2
L
L
8 FE5
4 FE5
3 FE5
L
GR
L
2
F20
Junction
Connector
1
L
GR
W
R
B
(Shielded)
B
W
R
G
P
1
B
F5
Amplifier Antenna
Assembly
Antenna
12
20
GR
13
F20
Junction Connector
GR
F2(A), F3(B), F18(D), F37(C)
Stereo Component Amplifier Assembly
F2(A), F3(B), F18(D), F37(C)
Stereo Component Amplifier Assembly
12 D
7 D
8 D
1 D
5 D
4 D
3 D
2 D
ACC
TX-
TX+
MUTE
R+
R-
L+
L-
+B
FL+
FL-
FR+
FR-
WFL+
WFL-
WFR+
WFR-
RL+
RL-
RR+
RR-
CTR+
CTR-
1 A
2 C
6 C
8 C
7 C
4 B
10 B
1 C
5 C
3 C
9 C
4 C
10 C
3 B
9 B
L
13
L
5
F22
Junction
Connector
W
B
1
3
+
-
TWL+
TWL-
F8
Front No. 2 Speaker Assembly LH
W
B
1
3
+
-
TWR+
TWR-
F7
Front No. 2 Speaker Assembly RH
2
4
W
B
2
4
W
B
P
V
LG
L
B
Y
R
W
W
B
17 FE1
18 FE1
10 FE1
11 FE1
9 FE1
8 FE1
14 FL1
15 FL1
P
V
LG
L
B
Y
R
W
43 EK2
44 EK2
B
Y
1 IE6
2 IE6
1 IE3
2 IE3
2 JK1
1 JK1
2 JL1
1 JL1
R
L
B
L
B
Y
R
W
1
2
F14
Front No. 3 Speaker
Assembly LH
F13
Front No. 3 Speaker
Assembly RH
I10
Front No. 1 Speaker
Assembly LH
I1
Front No. 1 Speaker
Assembly RH
J17
Rear Speaker Set LH
J15
Rear Speaker Set RH
F6
Front No. 4 Speaker
Assembly

* 4 : w/ Multi-Display
* 5 : w/o Multi-Display
* 6 : w/ Bluetooth Hands-Free System

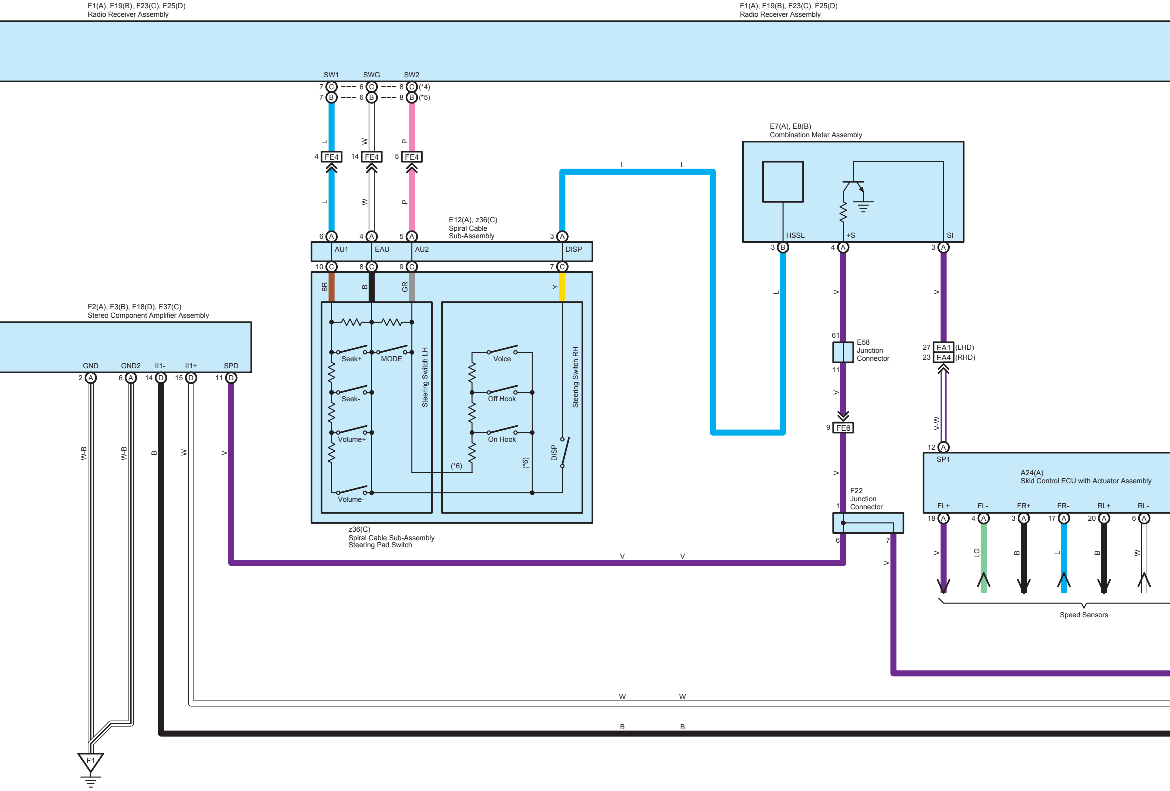
F1(A), F19(B), F23(C), F25(D)
Radio Receiver Assembly
F1(A), F19(B), F23(C), F25(D)
Radio Receiver Assembly
SW1
SWG
SW2
7 C 6 C 8 C (*4)
7 B 6 B 8 B (*5)
L
W
P
4 FE4
14 FE4
5 FE4
L
W
P
E12(A), z36(C)
Spiral Cable
Sub-Assembly
6 A
4 A
5 A
3 A
AU1
EAU
AU2
DISP
10 C
8 C
9 C
7 C
BR
B
GR
Y
Seek+
MODE
Seek-
Volume+
Volume-
Steering Switch LH
Voice
Off Hook
On Hook
(*6)
(*6)
DISP
Steering Switch RH
z36(C)
Spiral Cable Sub-Assembly
Steering Pad Switch
F2(A), F3(B), F18(D), F37(C)
Stereo Component Amplifier Assembly
GND
GND2
II1-
II1+
SPD
2 A
6 A
14 D
15 D
11 D
W-B
W-B
B
W
V
F1
L
L
E7(A), E8(B)
Combination Meter Assembly
HSSL
+S
SI
3 B
4 A
3 A
L
V
V
61
E58
Junction
Connector
11
V
9 FE6
V
F22
Junction
Connector
1
6
7
V
27 EA1 (LHD)
23 EA4 (RHD)
V-W
12 A
SP1
A24(A)
Skid Control ECU with Actuator Assembly
FL+
FL-
FR+
FR-
RL+
RL-
18 A
4 A
3 A
17 A
20 A
6 A
V
LG
B
L
B
W
Speed Sensors
V
V
W
W
B
B

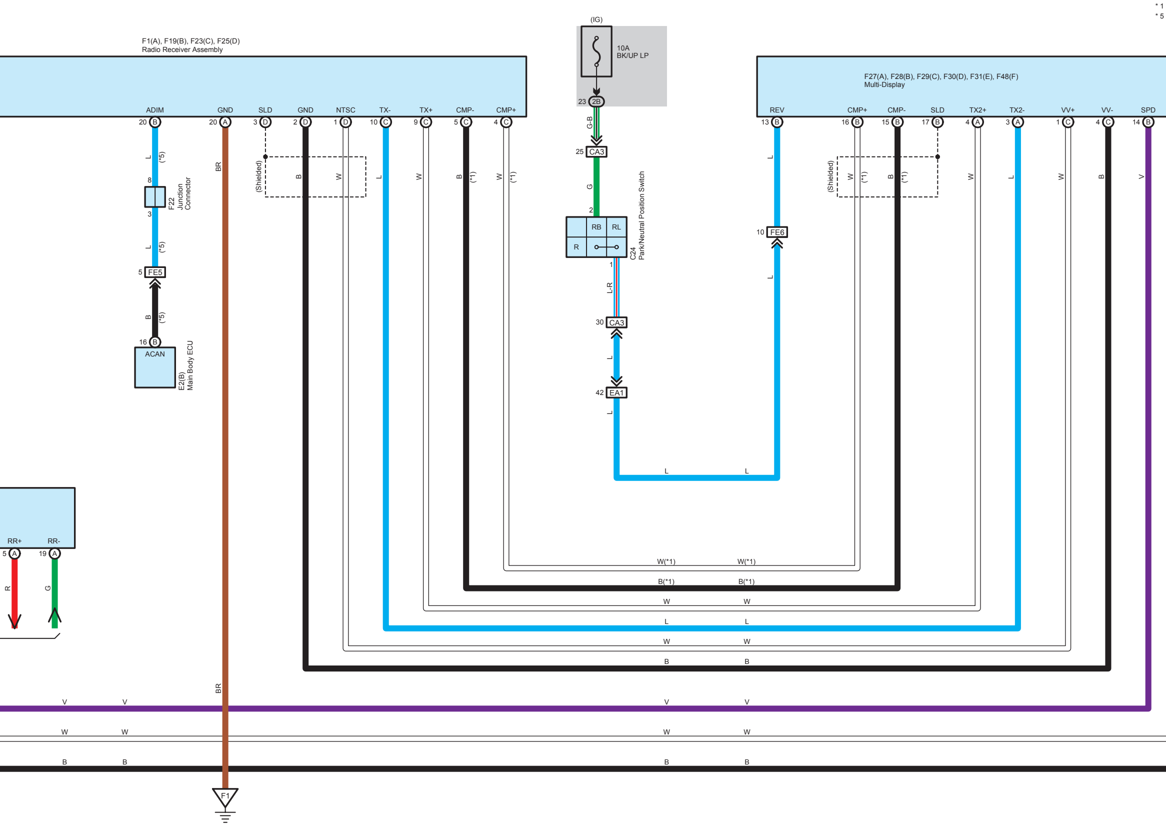

* 1
* 5
F1(A), F19(B), F23(C), F25(D)
Radio Receiver Assembly
ADIM
GND
SLD
GND
NTSC
TX-
TX+
CMP-
CMP+
20 B
20 A
3 D
2 D
1 D
10 C
9 C
5 C
4 C
(IG)
10A
BK/UP LP
23 2B
G-B
25 CA3
G
2
RB
RL
R
1
C24
Park/Neutral Position Switch
L-R
30 CA3
L
42 EA1
L
F27(A), F28(B), F29(C), F30(D), F31(E), F48(F)
Multi-Display
REV
CMP+
CMP-
SLD
TX2+
TX2-
VV+
VV-
SPD
13 B
16 B
15 B
17 B
4 A
3 A
1 C
4 C
14 B
L
(*5)
8
F22
Junction
Connector
3
L
(*5)
5 FE5
B
(*5)
16 B
ACAN
E2(B)
Main Body ECU
BR
(Shielded)
B
W
L
W
B
(*1)
W
(*1)
L
10 FE6
L
(Shielded)
W
(*1)
B
(*1)
W
L
W
B
V
L
L
W(*1)
W(*1)
B(*1)
B(*1)
W
W
L
L
W
W
B
B
RR+
RR-
5 A
19 A
R
G
BR
V
V
V
V
W
W
W
W
B
B
B
B
F1

: w/ Back Guide Monitor
: w/o Multi-Display

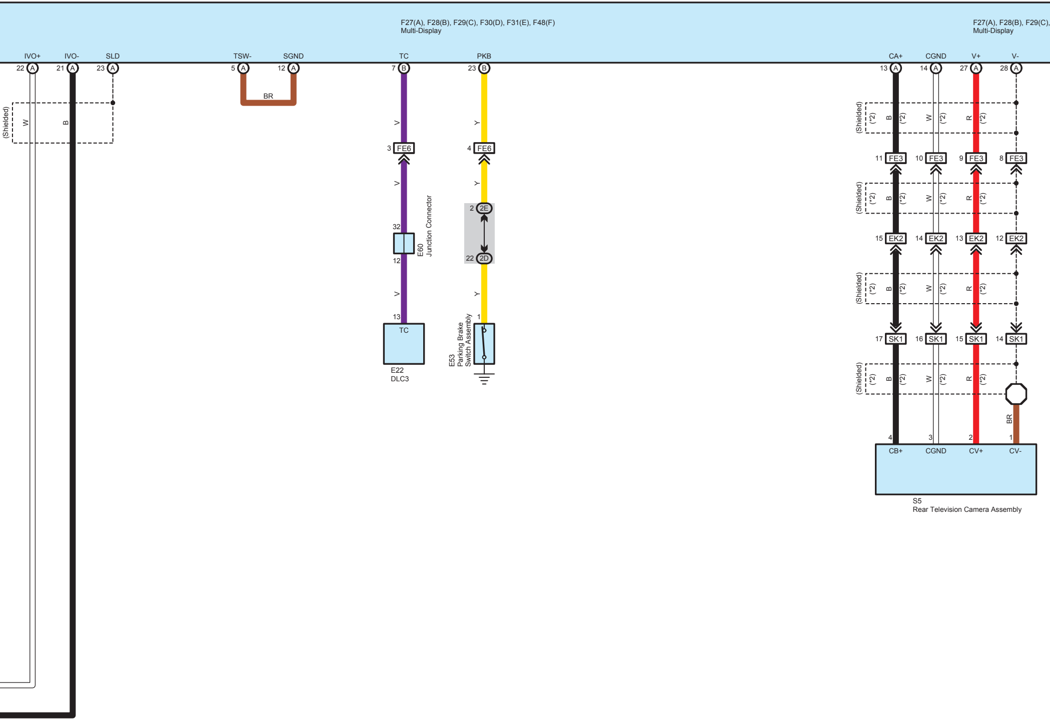

F27(A), F28(B), F29(C), F30(D), F31(E), F48(F)
Multi-Display
F27(A), F28(B), F29(C),
Multi-Display
IVO+
IVO-
SLD
TSW-
SGND
TC
PKB
CA+
CGND
V+
V-
22 A
21 A
23 A
5 A
12 A
7 B
23 B
13 A
14 A
27 A
28 A
(Shielded)
W
B
BR
V
3 FE6
4 FE6
Y
2 2E
22 2D
32
12
E60
Junction Connector
13
TC
E22
DLC3
1
E53
Parking Brake
Switch Assembly
(*2)
R
11 FE3
10 FE3
9 FE3
8 FE3
15 EK2
14 EK2
13 EK2
12 EK2
17 SK1
16 SK1
15 SK1
14 SK1
4
3
2
1
CB+
CGND
CV+
CV-
S5
Rear Television Camera Assembly

* 2 : w/ Rear View Monitor

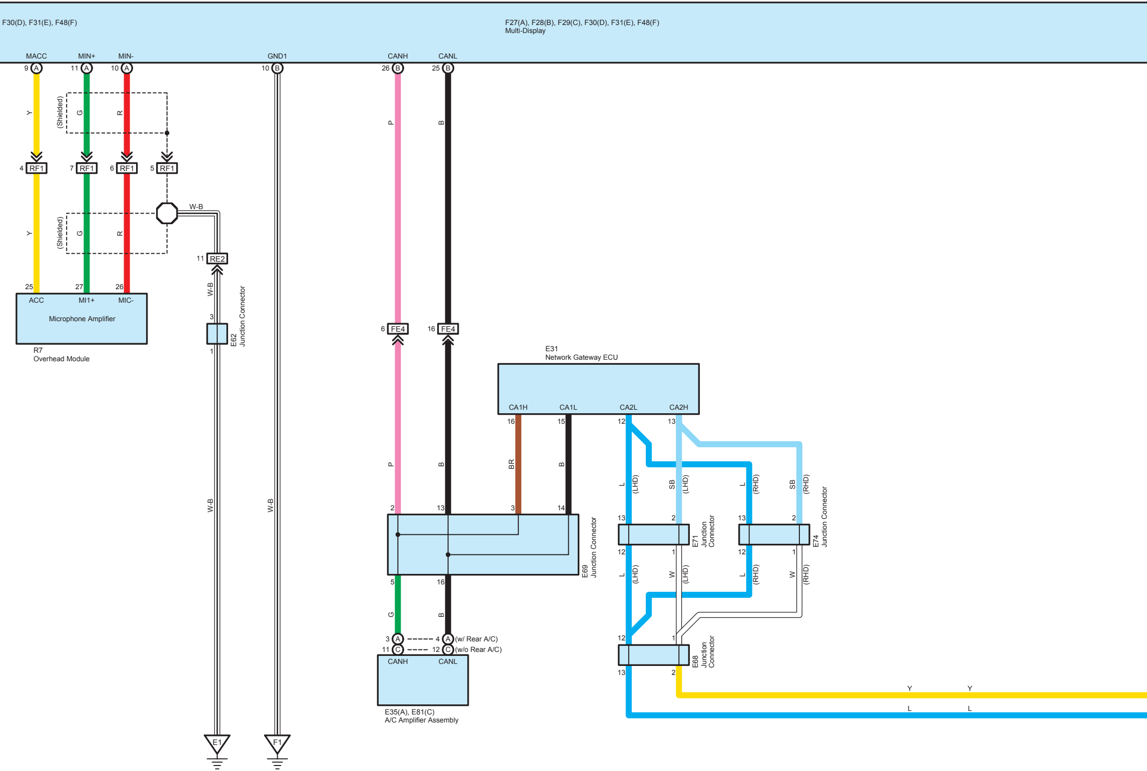
F30(D), F31(E), F48(F)
F27(A), F28(B), F29(C), F30(D), F31(E), F48(F)
Multi-Display
MACC
MIN+
MIN-
GND1
CANH
CANL
9 A
11 A
10 A
10 B
26 B
25 B
Y
G
R
(Shielded)
P
B
4 RF1
7 RF1
6 RF1
5 RF1
W-B
11 RE2
25
27
26
ACC
MI1+
MIC-
Microphone Amplifier
R7
Overhead Module
3
1
E62
Junction Connector
6 FE4
16 FE4
E31
Network Gateway ECU
CA1H
CA1L
CA2L
CA2H
16
15
12
13
BR
L
SB
(LHD)
(RHD)
W
2
13
3
14
5
16
E69
Junction Connector
E71
Junction Connector
E74
Junction Connector
E68
Junction Connector
12
1
3 A
4 A
(w/ Rear A/C)
11 C
12 C
(w/o Rear A/C)
CANH
CANL
E35(A), E81(C)
A/C Amplifier Assembly
E1
F1

* 1 : w/ Back Guide Monitor
* 3 : w/o Back Guide Monitor

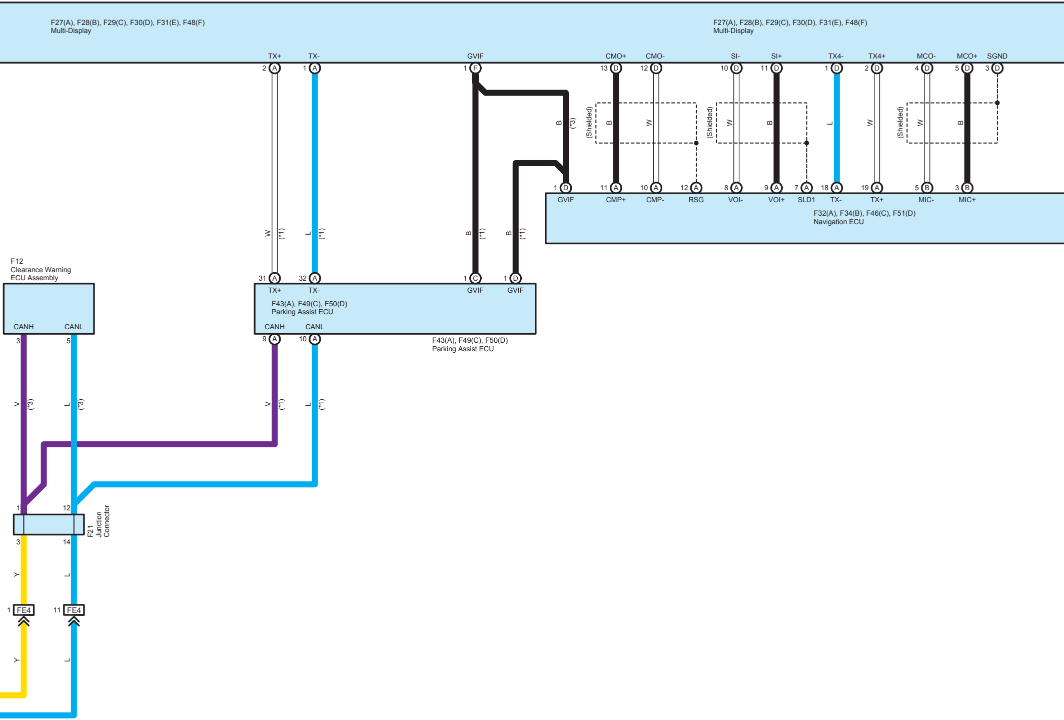
F27(A), F28(B), F29(C), F30(D), F31(E), F48(F)
Multi-Display
F27(A), F28(B), F29(C), F30(D), F31(E), F48(F)
Multi-Display
TX+
TX-
GVIF
CMO+
CMO-
SI-
SI+
TX4-
TX4+
MCO-
MCO+
SGND
2 A
1 A
1 F
13 D
12 D
10 D
11 D
1 D
2 D
4 D
5 D
3 D
B
(*3)
(Shielded)
B
W
(Shielded)
W
B
L
W
(Shielded)
W
B
1 D
11 A
10 A
12 A
8 A
9 A
7 A
18 A
19 A
5 B
3 B
GVIF
CMP+
CMP-
RSG
VOI-
VOI+
SLD1
TX-
TX+
MIC-
MIC+
F32(A), F34(B), F46(C), F51(D)
Navigation ECU
W
(*1)
L
(*1)
B
(*1)
B
(*1)
F12
Clearance Warning
ECU Assembly
31 A
32 A
1 C
1 D
TX+
TX-
GVIF
GVIF
F43(A), F49(C), F50(D)
Parking Assist ECU
CANH
CANL
CANH
CANL
3
5
9 A
10 A
F43(A), F49(C), F50(D)
Parking Assist ECU
V
(*3)
L
(*3)
V
(*1)
L
(*1)
1
12
3
14
F21
Junction
Connector
Y
L
1 FE4
11 FE4
Y
L

* 1 : w/ Back Guide Monitor
* 3 : w/o Back Guide Monitor

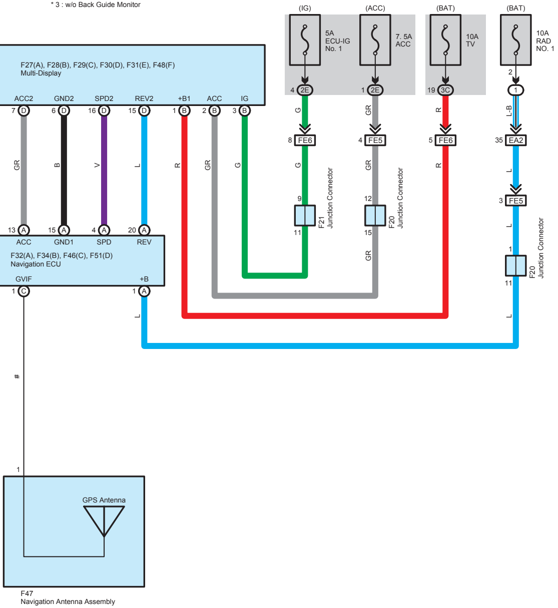
(IG)
5A
ECU-IG
No. 1
(ACC)
7. 5A
ACC
(BAT)
10A
TV
(BAT)
10A
RAD
NO. 1
2
4 2E
1 2E
19 3C
1
F27(A), F28(B), F29(C), F30(D), F31(E), F48(F)
Multi-Display
ACC2
GND2
SPD2
REV2
+B1
ACC
IG
7 D
6 D
16 D
15 D
1 B
2 B
3 B
G
GR
R
L-B
8 FE6
4 FE5
5 FE6
35 EA2
GR
B
V
L
R
GR
G
G
GR
R
L
9
11
F21
Junction Connector
12
15
F20
Junction Connector
3 FE5
L
1
11
F20
Junction Connector
GR
13 A
15 A
4 A
20 A
ACC
GND1
SPD
REV
F32(A), F34(B), F46(C), F51(D)
Navigation ECU
GVIF
+B
1 C
1 A
L
L
#
1
GPS Antenna
F47
Navigation Antenna Assembly

# : There is no wire color information.