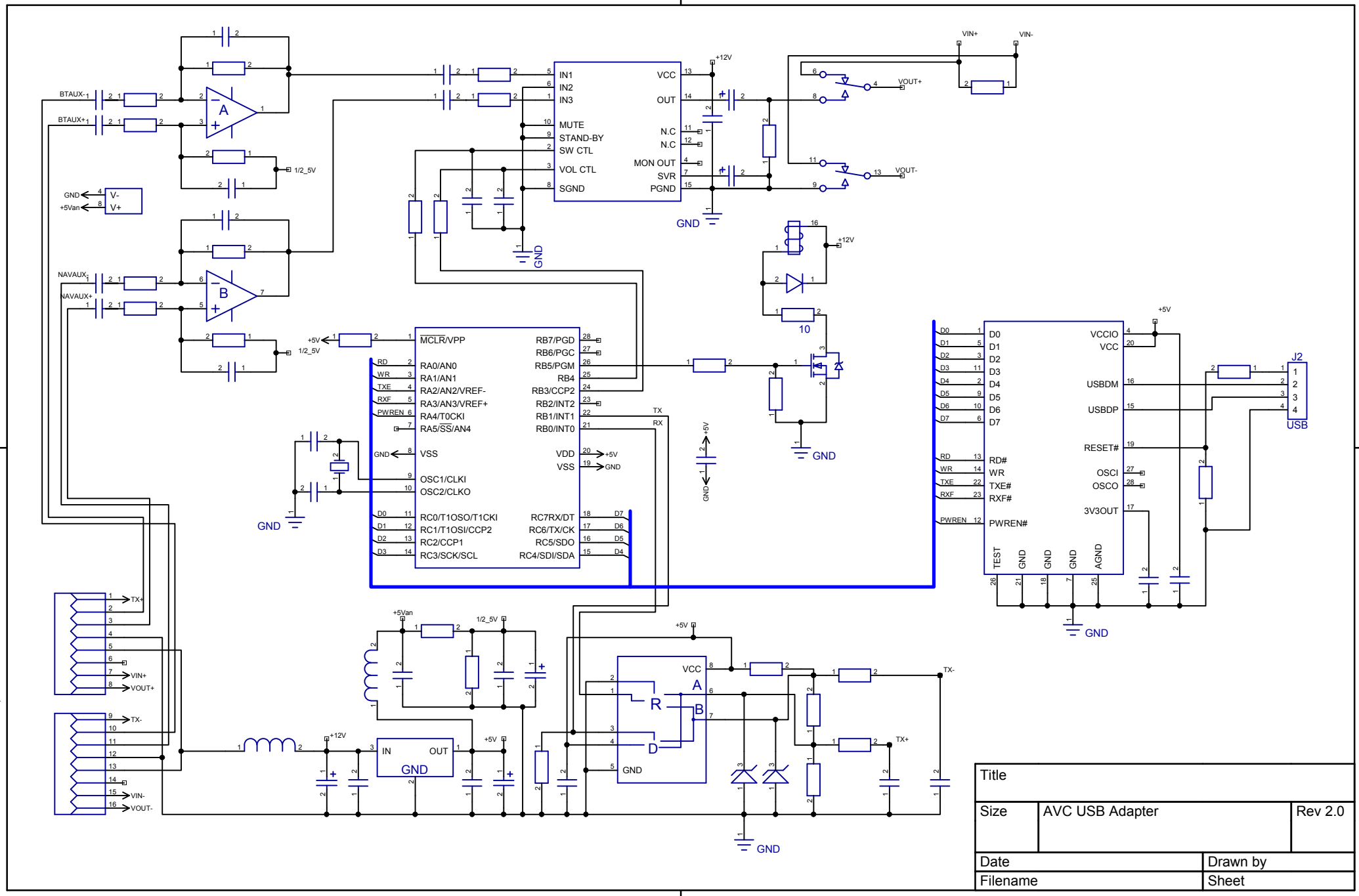

Title		
Size	AVC USB Adapter	Rev 2.0
Date		Drawn by
Filename		Sheet