Mini PCI-E to PCI-E Adapter Ver2.11
Model:MP2W

[1] Impedance control required for CLK+ CLK- PETXP PETXN PERXP PERXN : 100ohm
[2] Impedance control required for DP DN : 90ohm

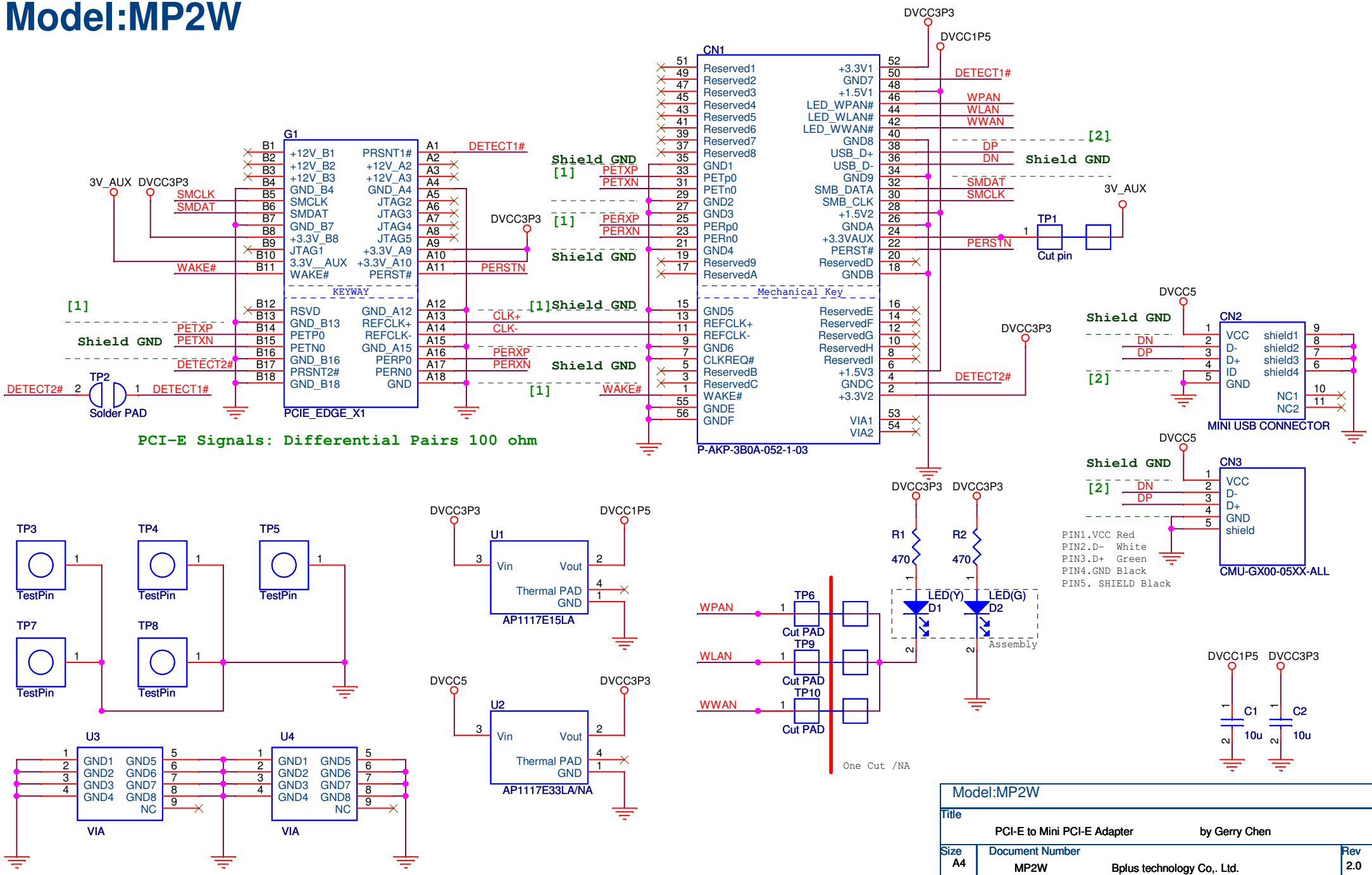

Model:MP2W	
Title	PCI-E to Mini PCI-E Adapter by Gerry Chen
Size A4	Document Number MP2W Bplus technology Co,. Ltd. Rev 2.0
Date: Friday, June 05, 2009	Sheet 1 of 1