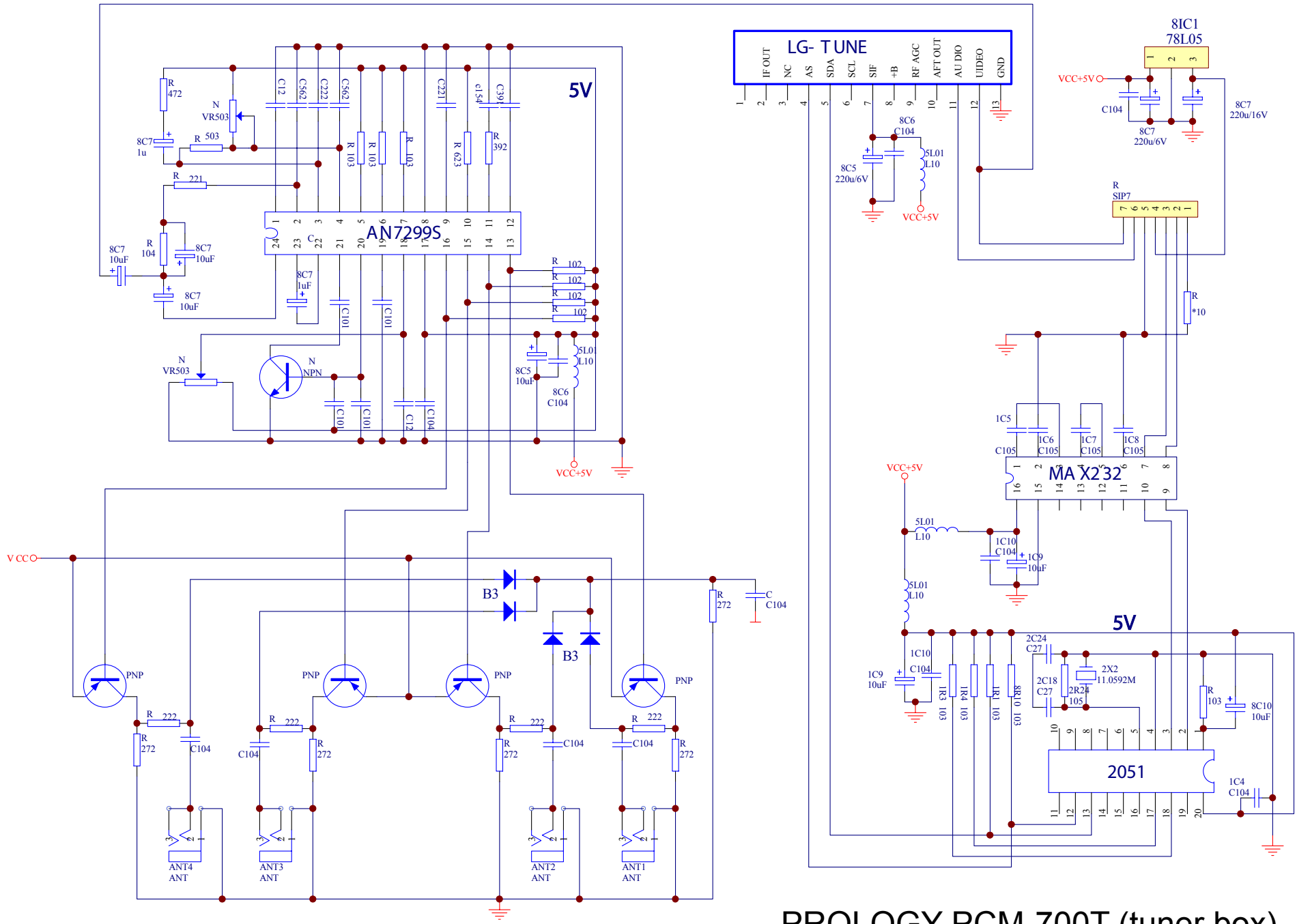


PROLOGY PCM-700T (tuner box)