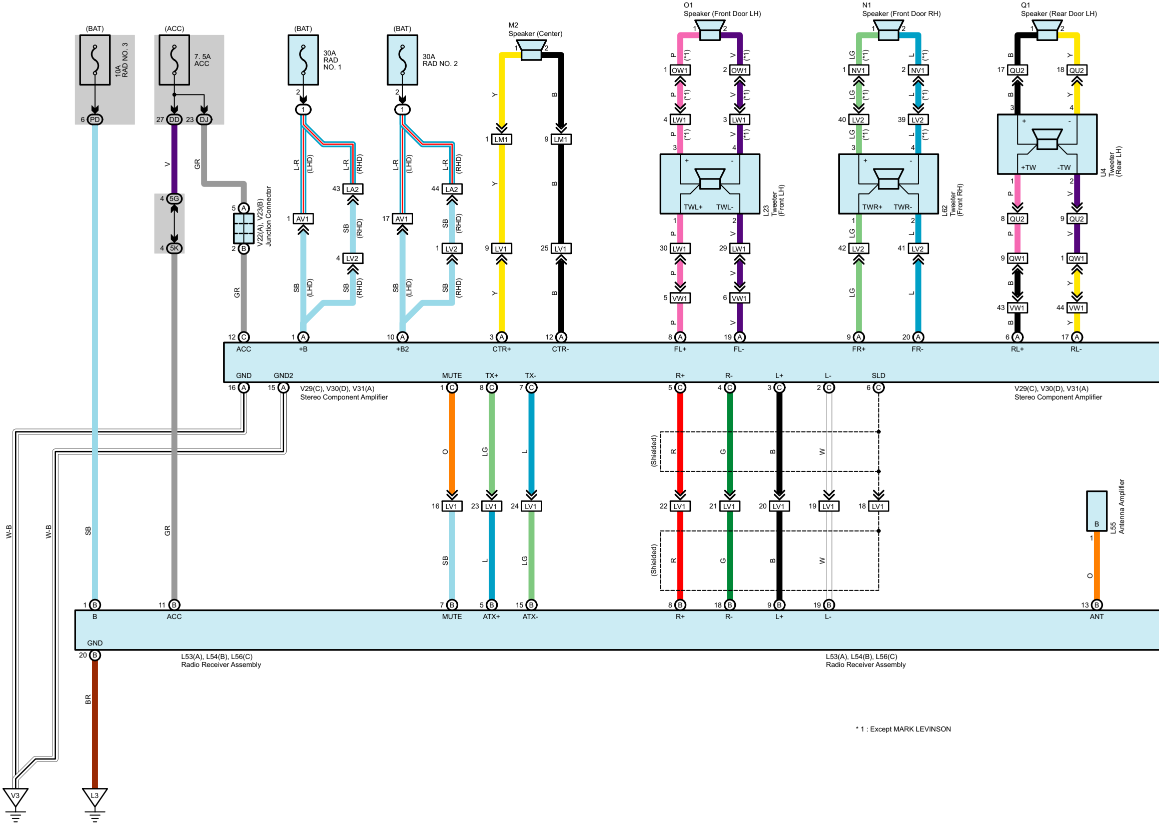
(BAT)
10A
RAD NO. 3
6 PD
(ACC)
7. 5A
ACC
27 DD
23 DJ
(BAT)
30A
RAD
NO. 1
(BAT)
30A
RAD NO. 2
M2
Speaker (Center)
O1
Speaker (Front Door LH)
N1
Speaker (Front Door RH)
Q1
Speaker (Rear Door LH)
OW1
LW1
NV1
LV2
QU2
QW1
VW1
LM1
LV1
AV1
LA2
4 5G
4 5K
V
GR
SB
L-R
(LHD)
(RHD)
Y
B
P
LG
L
(*1)
V22(A), V23(B)
Junction Connector
L23
Tweeter
(Front LH)
TWL+
TWL-
L62
Tweeter
(Front RH)
TWR+
TWR-
U4
Tweeter
(Rear LH)
+TW
-TW
ACC
+B
+B2
CTR+
CTR-
FL+
FL-
FR+
FR-
RL+
RL-
GND
GND2
MUTE
TX+
TX-
R+
R-
L+
L-
SLD
V29(C), V30(D), V31(A)
Stereo Component Amplifier
O
LG
L
(Shielded)
R
G
B
W
L55
Antenna Amplifier
W-B
B
ACC
MUTE
ATX+
ATX-
ANT
GND
L53(A), L54(B), L56(C)
Radio Receiver Assembly
BR
V3
L3

* 1 : Except MARK LEVINSON

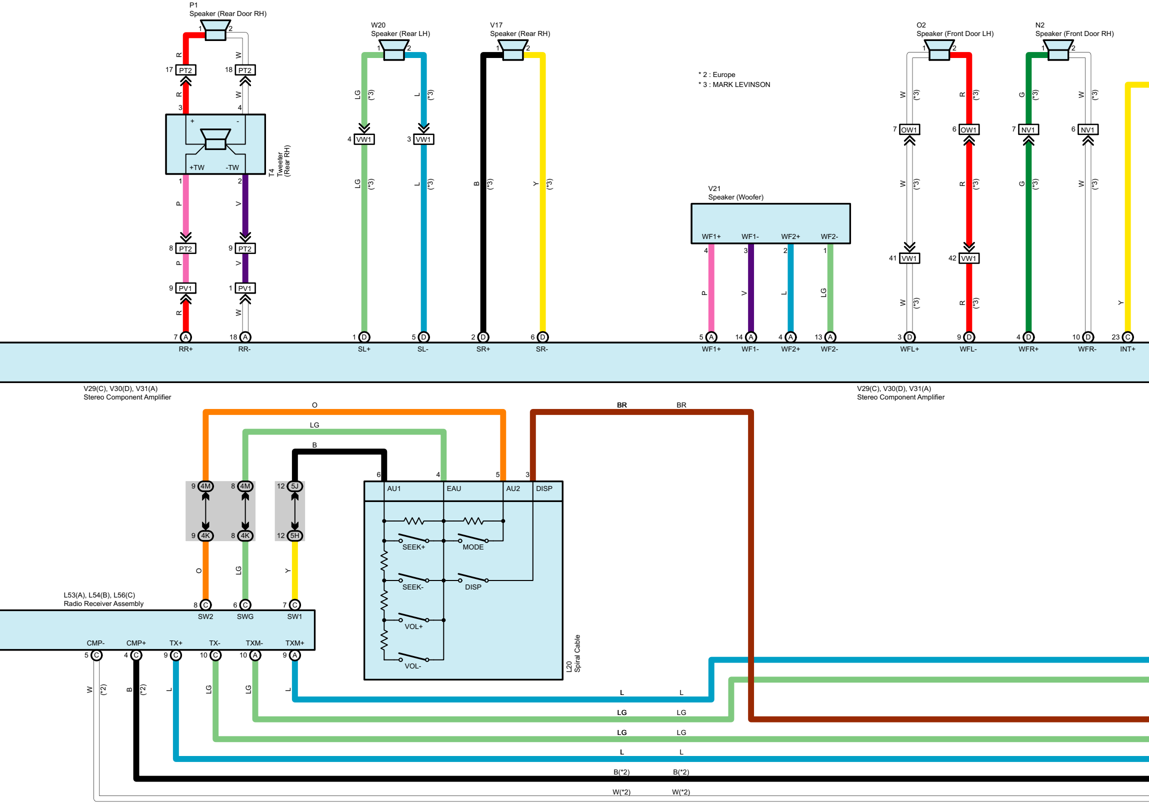
P1
Speaker (Rear Door RH)
W20
Speaker (Rear LH)
V17
Speaker (Rear RH)
* 2 : Europe
* 3 : MARK LEVINSON
O2
Speaker (Front Door LH)
N2
Speaker (Front Door RH)
T4
Tweeter
(Rear RH)
+TW
-TW
PT2
PV1
VW1
OW1
NV1
V21
Speaker (Woofer)
WF1+
WF1-
WF2+
WF2-
RR+
RR-
SL+
SL-
SR+
SR-
WFL+
WFL-
WFR+
WFR-
INT+
V29(C), V30(D), V31(A)
Stereo Component Amplifier
O
LG
B
BR
4M
4K
5J
5H
AU1
EAU
AU2
DISP
SEEK+
MODE
SEEK-
DISP
VOL+
VOL-
L20
Spiral Cable
L53(A), L54(B), L56(C)
Radio Receiver Assembly
SW2
SWG
SW1
CMP-
CMP+
TX+
TX-
TXM-
TXM+
L
B(*2)
W(*2)
(*2)
(*3)
R
W
P
V
G
Y

* 2 : Europe
* 4 : Except 3UZ-FE
* 5 : w/ LEXUS Parking Assist (Rear View Monitor or Back Guide Monitor)

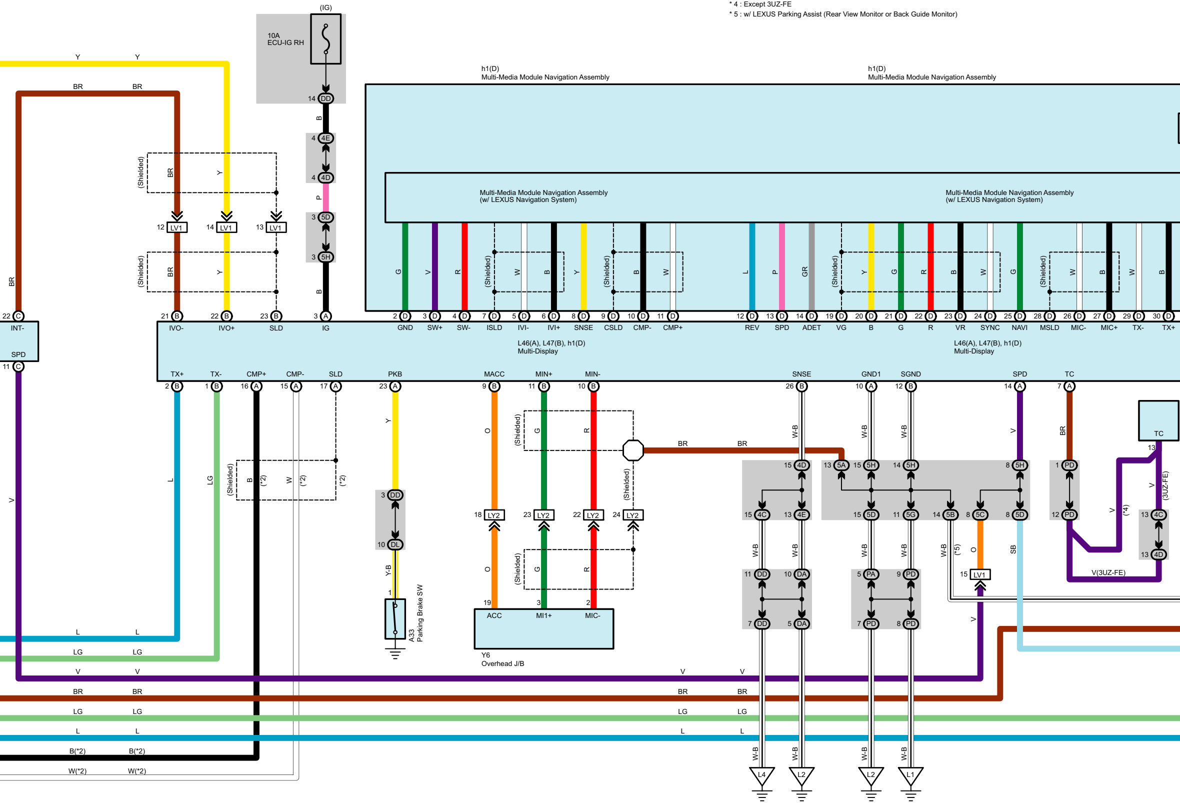
(IG)
10A
ECU-IG RH
h1(D)
Multi-Media Module Navigation Assembly
h1(D)
Multi-Media Module Navigation Assembly
Multi-Media Module Navigation Assembly
(w/ LEXUS Navigation System)
Multi-Media Module Navigation Assembly
(w/ LEXUS Navigation System)
(Shielded)
LV1
DD
4E
4D
5D
5H
INT-
SPD
IVO-
IVO+
SLD
IG
GND
SW+
SW-
ISLD
IVI-
IVI+
SNSE
CSLD
CMP-
CMP+
REV
SPD
ADET
VG
B
G
R
VR
SYNC
NAVI
MSLD
MIC-
MIC+
TX-
TX+
L46(A), L47(B), h1(D)
Multi-Display
L46(A), L47(B), h1(D)
Multi-Display
TX+
TX-
CMP+
CMP-
SLD
PKB
MACC
MIN+
MIN-
SNSE
GND1
SGND
SPD
TC
(*2)
LY2
DL
A33
Parking Brake SW
ACC
MI1+
MIC-
Y6
Overhead J/B
TC
(*4)
(*5)
(3UZ-FE)
V(3UZ-FE)
4C
4E
5A
5G
5B
5C
PD
PA
DA
L4
L2
L2
L1
Y
BR
B
P
G
V
R
W
L
GR
SB
LG
O
Y-B
W-B
B(*2)
W(*2)

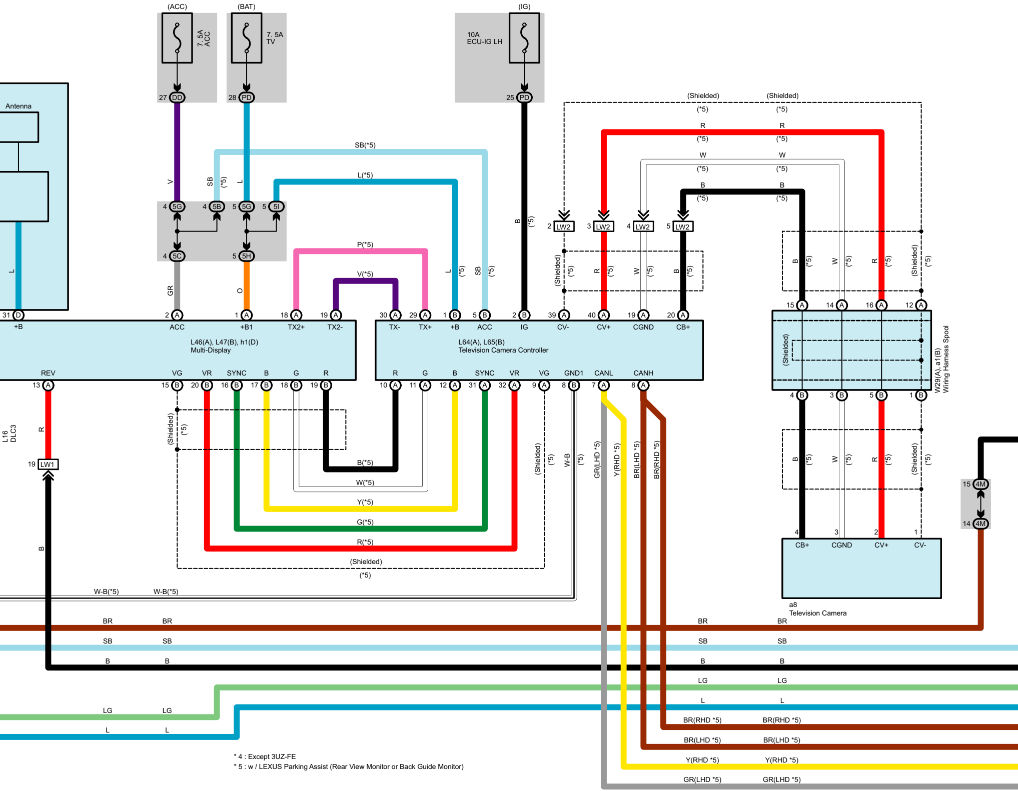
(ACC)
7. 5A ACC
(BAT)
7. 5A TV
(IG)
10A ECU-IG LH
27 DD
28 PD
25 PD
Antenna
L16 DLC3
19 LW1
L46(A), L47(B), h1(D)
Multi-Display
+B
ACC
+B1
TX2+
TX2-
REV
VG
VR
SYNC
B
G
R
L64(A), L65(B)
Television Camera Controller
TX-
TX+
+B
ACC
IG
CV-
CV+
CGND
CB+
R
G
B
SYNC
VR
VG
GND1
CANL
CANH
4 5G
4 5B
5 5G
5 5I
4 5C
5 5H
2 LW2
3 LW2
4 LW2
5 LW2
W29(A), a1(B)
Wiring Harness Spool
a8
Television Camera
CB+
CGND
CV+
CV-
15 4M
14 4M
(Shielded)
(*5)
SB(*5)
L(*5)
P(*5)
V(*5)
B(*5)
W(*5)
Y(*5)
G(*5)
R(*5)
W-B(*5)
BR
SB
B
LG
L
BR(RHD *5)
BR(LHD *5)
Y(RHD *5)
GR(LHD *5)
V
SB
L
GR
O
R
W
B
W-B
GR(LHD *5)
Y(RHD *5)

* 4 : Except 3UZ-FE

* 5 : w / LEXUS Parking Assist (Rear View Monitor or Back Guide Monitor)

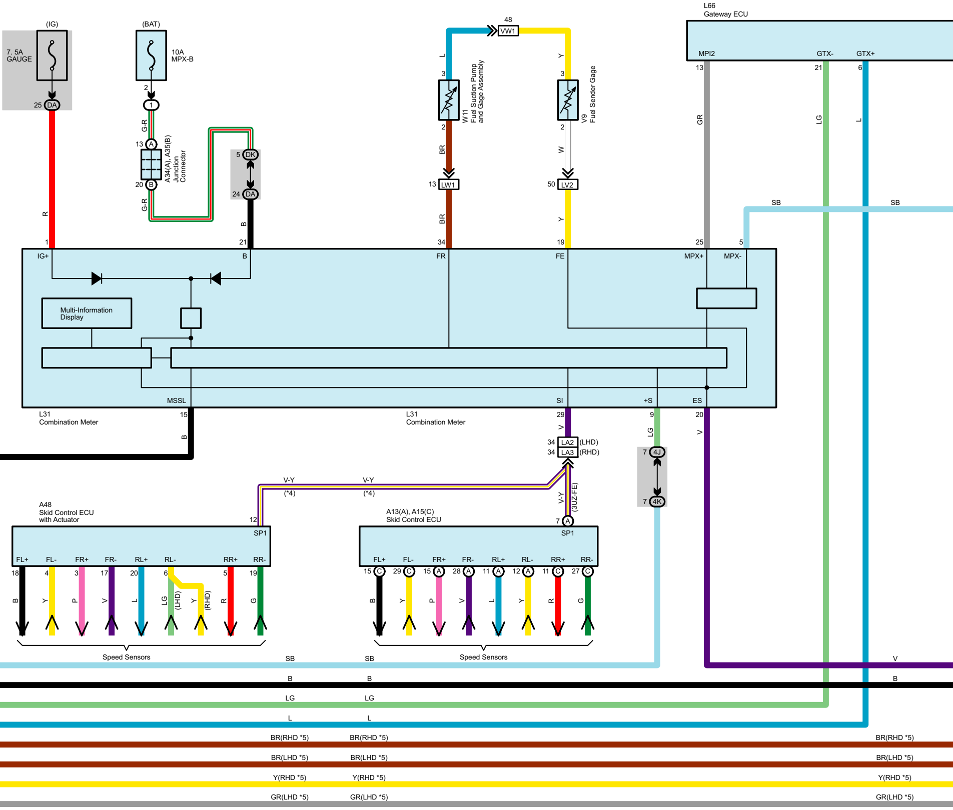
(IG)
7. 5A
GAUGE
25 DA
R
1
(BAT)
10A
MPX-B
2
1
G-R
13 A
A34(A), A35(B)
Junction
Connector
20 B
G-R
5 DK
24 DA
B
21
48
VW1
L
3
W11
Fuel Suction Pump
and Gage Assembly
2
BR
13 LW1
BR
34
Y
3
V9
Fuel Sender Gage
2
W
50 LV2
Y
19
L66
Gateway ECU
MPI2
GTX-
GTX+
13
21
6
GR
LG
L
SB
SB
25
5
IG+
B
FR
FE
MPX+
MPX-
Multi-Information
Display
MSSL
SI
+S
ES
L31
Combination Meter
15
B
L31
Combination Meter
29
V
34 LA2 (LHD)
34 LA3 (RHD)
9
LG
7 4J
7 4K
20
V
V-Y
(*4)
V-Y
(*4)
V-Y
(3UZ-FE)
A48
Skid Control ECU
with Actuator
12
SP1
FL+
FL-
FR+
FR-
RL+
RL-
RR+
RR-
18
4
3
17
20
6
5
19
B
Y
P
V
L
LG
(LHD)
Y
(RHD)
R
G
Speed Sensors
A13(A), A15(C)
Skid Control ECU
7 A
SP1
FL+
FL-
FR+
FR-
RL+
RL-
RR+
RR-
15 C
29 C
15 A
28 A
11 A
12 A
11 C
27 C
B
Y
P
V
L
Y
R
G
Speed Sensors
SB
SB
V
B
B
B
LG
LG
L
L
BR(RHD *5)
BR(RHD *5)
BR(RHD *5)
BR(LHD *5)
BR(LHD *5)
BR(LHD *5)
Y(RHD *5)
Y(RHD *5)
Y(RHD *5)
GR(LHD *5)
GR(LHD *5)
GR(LHD *5)

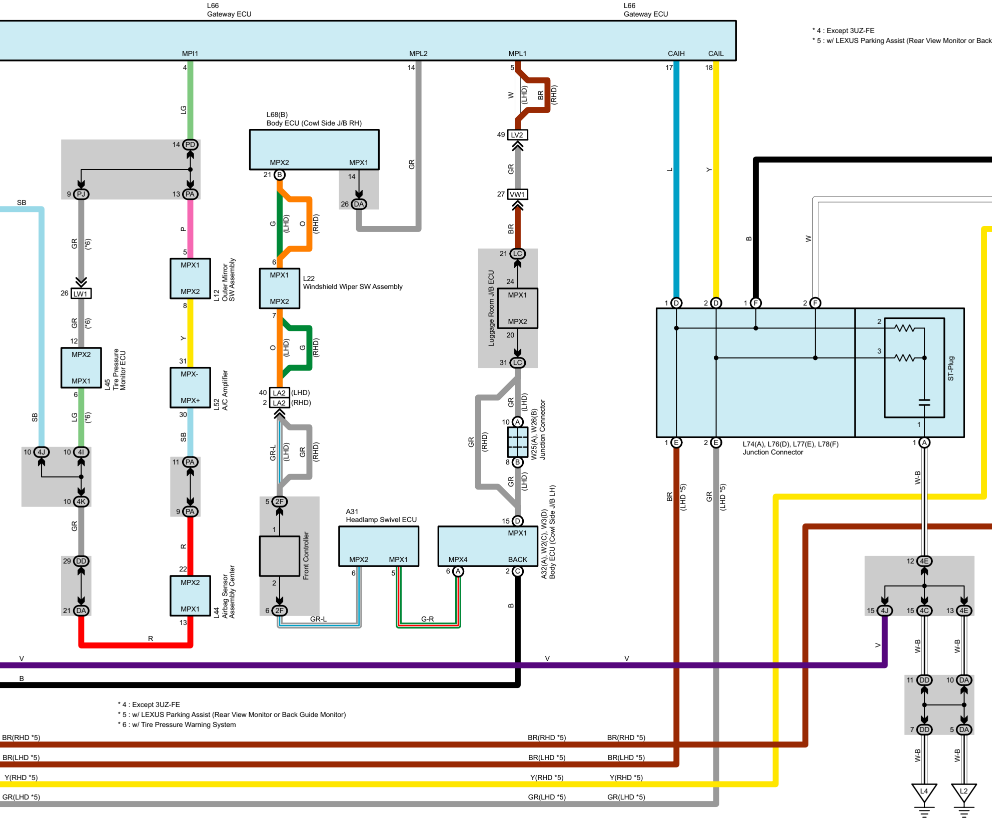

* 4 : Except 3UZ-FE
* 5 : w/ LEXUS Parking Assist (Rear View Monitor or Back

* 4 : Except 3UZ-FE
* 5 : w/ LEXUS Parking Assist (Rear View Monitor or Back Guide Monitor)
* 6 : w/ Tire Pressure Warning System

L66
Gateway ECU
MPI1
MPL2
MPL1
CAIH
CAIL
L68(B)
Body ECU (Cowl Side J/B RH)
MPX2
MPX1
L22
Windshield Wiper SW Assembly
L12
Outer Mirror
SW Assembly
L52
A/C Amplifier
MPX-
MPX+
L45
Tire Pressure
Monitor ECU
L44
Airbag Sensor
Assembly Center
Front Controller
A31
Headlamp Swivel ECU
A32(A), W2(C), W3(D)
Body ECU (Cowl Side J/B LH)
MPX4
BACK
Luggage Room J/B ECU
W25(A), W26(B)
Junction Connector
L74(A), L76(D), L77(E), L78(F)
Junction Connector
ST-Plug
LV2
VW1
LW1
LA2 (LHD)
LA2 (RHD)
PD
PJ
PA
DA
DD
LC
4J
4I
4K
2F
4E
4C
L4
L2
LG
GR
P
Y
SB
R
G
O
W
BR
L
B
V
W-B
GR-L
G-R
(LHD)
(RHD)
(*6)
(LHD *5)
BR(RHD *5)
BR(LHD *5)
Y(RHD *5)
GR(LHD *5)

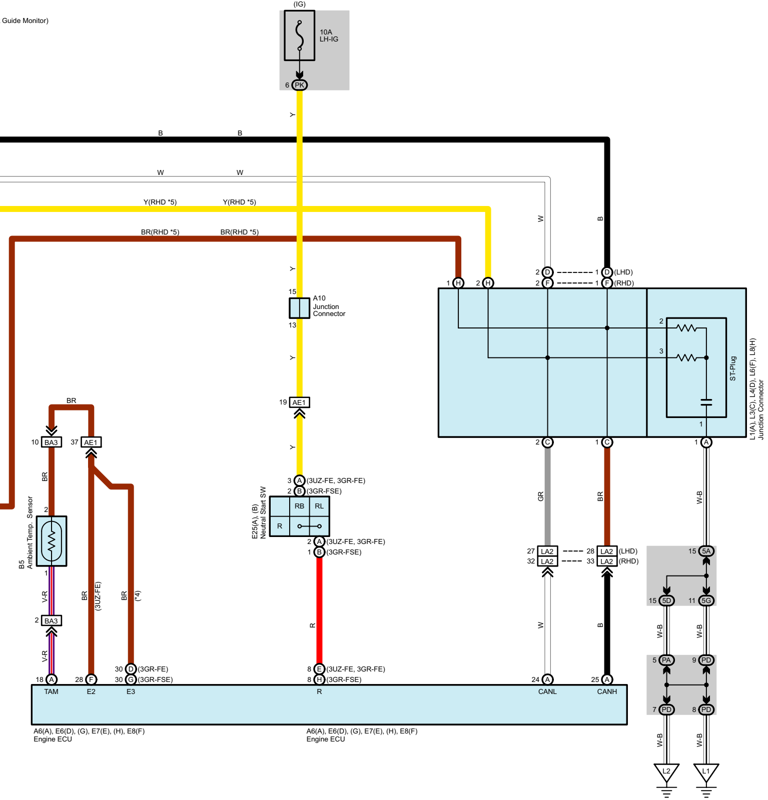
Guide Monitor)
(IG)
10A
LH-IG
6 PK
Y
B
B
W
W
Y(RHD *5)
Y(RHD *5)
BR(RHD *5)
BR(RHD *5)
W
B
15
A10
Junction
Connector
13
Y
19 AE1
Y
1 H
2 H
2 D
1 D (LHD)
2 F
1 F (RHD)
2
3
ST-Plug
1
L1(A), L3(C), L4(D), L6(F), L8(H)
Junction Connector
2 C
1 C
1 A
GR
BR
W-B
BR
10 BA3
37 AE1
BR
2
B5
Ambient Temp. Sensor
1
V-R
2 BA3
V-R
BR
(3UZ-FE)
BR
(*4)
3 A (3UZ-FE, 3GR-FE)
2 B (3GR-FSE)
E25(A), (B)
Neutral Start SW
RB
RL
R
2 A (3UZ-FE, 3GR-FE)
1 B (3GR-FSE)
R
27 LA2
32 LA2
28 LA2 (LHD)
33 LA2 (RHD)
W
B
15 5A
15 5D
11 5G
W-B
W-B
5 PA
9 PD
7 PD
8 PD
W-B
W-B
L2
L1
18 A
28 F
30 D (3GR-FE)
30 G (3GR-FSE)
8 E (3UZ-FE, 3GR-FE)
8 H (3GR-FSE)
24 A
25 A
TAM
E2
E3
R
CANL
CANH
A6(A), E6(D), (G), E7(E), (H), E8(F)
Engine ECU
A6(A), E6(D), (G), E7(E), (H), E8(F)
Engine ECU